SHEET 4 OF 4

THE PLAT OF ALPINE ESTATES PHASE ONE

IN THE E 1/2 OF THE NW 1/4, AND THE W 1/2 OF THE NE 1/4 OF SECTION 19, T9S, R40E, W.M. BAKER COUNTY, OREGON

VOL. SD 1999-002

PAGE _____

SURVEYORS CERTIFICATE

I, David L. Haddock, after being first duly sworn, do depose and say that I am a registered professional land surveyor in the State of Oregon and that I have correctly surveyed and marked with legal monuments the lands described below and represented in the accompanying plat of ALPINE ESTATES, PHASE ONE.

Beginning at the NW 1/16th corner of Section 19, Township 9 South, Range 40 East, Willamette Meridian, Baker County, State of Oregon, Thence along the North-South centerline through the northwest quarter of said section 19 to a point on the south line of that tract of land conveyed to Kenneth and Victoria Rockwell by deed recorded in microfilm 95-05-183 of the Baker County deed records N0°19'46"W a distance of 918.88 feet; thence along the south line of said Rockwell tract N89°47'38"E a distance of 338.03 feet; thence along the east line of said Rockwell Tract by the following courses and distances, N39°15'19"W a distance of 13.16 feet; thence N19°30'59"W a distance of 86.52 feet; thence N32°44'54"W a distance of 76.35 feet; thence to a point on the north line of said section 19, N1°50'35"W a distance of 243.91 feet; thence along said north line to the north one quarter corner of said section 19, N89°46'21"E a distance of 1060.25 feet; thence along said north line N89°31'53"E a distance of 2.76 feet; thence to a point on the centerline of ESTES St. in the vacated LACHNERS ADDITION to the City of Baker S0°06'06"E a distance of 658.29 feet; thence along said centerline to a point on the centerline of the old reservoir ditch as identified in survey 9-40-24 of the Baker County Survey records S89°43'40"W a distance of 790.58 feet; thence along said ditch centerline by the following courses and distances, S21°09'12"E a distance of 175.64 feet; thence S60°54'49"E a distance of 276.50 feet; thence S49°41'57"E a distance of 113.24 feet; thence S69°17'26"E a distance of 93.18 feet; thence S86°49'00"E a distance of 157.45 feet; thence S71°28'53"E a distance of 200.01' feet; thence S73°20'59"E a distance of 96.28 feet; thence S56°35'33"E a distance of 120.24 feet; thence S65°46'16"E a distance of 196.96 feet; thence to a point on the south line of said LACHNERS ADDITION N89°31'17"E a distaince of 387.66 feet; Thence S0°06'30"E a distance of 656.60 feet; thence S89°34'46"W a distance of 150.58 feet; thence S89°33'28"W a distance of 749.88 feet; thence to a point on the south line of the NW quarter of said section 19, S0°06'47"E a distance of 660.03 feet; thence to the Center West 1/16 of said section 19, S89°35'30"W a distance of 1199.13 feet; thence to the POINT OF BEGINNING, N0°21'28"W a distance of 1318.17 feet.

Excepting therefrom that tract of land conveyed to Irving M. Townsend and Susan M. Townsend by warranty deed 77-19-081 and described as follows:
Beginning at a point on the centerline of the roadway easement and right of way described in the above mentioned deed which point is S21°21'52"W, 1313.85 feet from the north quarter corner of section 19, Township 9 South, Range 40 East, Wilammette Meridian, Baker County, Oregon; thence along said road centerline S81°17'52'w a distance of 22.79 feet; thence 77.84 feet along a 260.44 foot radius curve to the right, the long chord of which bears S89°55'46"W a distance of 77.55 feet; thence N81°30'29"W a distance of 225.11 feet; thence 85.07 feet along a 477.47 foot radius curve to the right, the long chord of which bears N76°24'04"W a distance of 84.97 feet; thence leaving said centerline S30°17'14"W a distance of 547.10 feet; thence S83°55'10"E a distance of 483.00 feet; thence to the point of beginning N22°58'43"E a distance of 514.76 feet.

SUBJECT TO: The power line easement granted to Oregon Trail Electric Consumers Cooperative, a corporation, from instrument, including the terms and provisions thereof, recorded January 4, 1993, in Deed 93-01-013.

SUBJECT TO: A communications systems easement granted to American Telephone and Telegraph Company, a corporation, by instrument, including the terms and provisions thereof, recorded October, 3, 1989, and ammended April 8, 1991 in deed 91-15-068.

SUBJECT TO: A communications systems easement granted to WorldCom Network Services Inc., by instrument, including the terms and provisions thereof, recorded September 9, 1996, in deed 96-37-128.

SUBJECT TO: Existing utilities, if any.

NARRATIVE OF SURVEY

This survey was performed at the request of Mr. James Briggs. The purpose of the survey was to subdivide the lands shown on sheet 2 of this plat. The boundaries of the entire tract were established by the reference surveys as shown with the exception of the most northwesterly corner which was set at the intersection of the south line of the Rockwell parcel with the north - south 1/16th section line. The corner near the westerly end of Grace Street was set at the record distance as shown on survey 9-40-24 from the reference monument identified in survey Note 1. The north line of the Townsend tract was reestablished by projecting the west line through the reference monument from survey 9-40-24 the record distance. A length for the north line was computed from the deed and the northeast corner was located using a distance - distance intersect. The monuments on the north line were then set from deed record curve and line data. Record deeds consulted for this subdivision are listed in the table on this sheet and record surveys are listed in the LEGEND on sheet 2. The location of existing utilities was limited to those marked after the call to Oregon Utilities Notification Center and those visible on the ground. All utilities without a designated easement as shown on this map were to be placed in or moved to the roadway.

RECORD DEEDS

Volume 156, Page 243
Book 171, Page 1122
Book 172, Page 252

75 - 07 - 064
75 - 49 - 054
76 - 17 - 075
76 - 39 - 050
77 - 03 - 061
77 - 19 - 081
78 - 46 - 049
79 - 19 - 102
79 - 29 - 061
80 - 23 - 019
81 - 25 - 005
81 - 28 - 121
85 - 32 - 074
89 - 40 - 104
89 - 40 - 126
91 - 12 - 043
92 - 19 - 115
92 - 33 - 090
92 - 33 - 092
92 - 31 - 108
92 - 42 - 079
93 - 01 - 013
96 - 37 - 124
96 - 37 - 128
97 - 48 - 151
98 - 20 - 129
98 - 21 - 150

TABLE OF RECORD MEASUREMENTS

LINE No.	BEARING	DISTANCE	REFERENCE SURVEY
RM1	N32°48'40"W	76.33'	9-40-24
RM2	N19°27'10"W	86.58'	9-40-24
RM3	S39°36'25"E	13.09'	9-40-23
RM4	S21°08'35"E	175.61'	9-40-29
RM5	N49°40'20"W	113.22'	9-40-24
RM6	N69°15'20"W	93.19'	9-40-24
RM7	N86°50'00"W	157.51'	9-40-24
RM8	N73°21'10"W	96.32'	9-40-24
RM9	N56°36'00"W	120.25'	9-40-24
RM10	N60°54'35"W	276.46'	9-40-24
RM11	N71°27'00"W	199.98'	9-40-24
RM12	N65°45'30"W	196.89'	9-40-24
RM13	S89°33'34"W	387.68'	9-40-24

EASEMENT DESCRIPTIONS

EASEMENT No. 1.

The following description is of the centerline of the "new" water line easement for the water system for ALPINE ESTATES to be created by the filing of this plat. The easement is 15 feet wide, 7.5 feet on either side of the centerline.

Beginning at the existing well which lies N82°34'59"E 1152.04 feet from the center west 1/16th corner of Section 19, T9S, R40E, W.M., Baker County, Oregon, Thence N15°06'25"W a distance of 1014.32 feet; Thence N15°04'12"W a distance of 217.80 feet; Thence N19°14'51"W a distance of 46.62 feet; Thence to a point on the south right of way line of Greenridge Drive, N22°58'43"E a distance of 37.34 feet.

EASEMENT No. 2.

The following description is for the communications systems easements which occupy the same general area. Easement deeds are 91-15-068 and 96-37-124.

Beginning at the 1/4 corner common to Sections 18, and 19, T9S, R40E, W.M., Baker County, Oregon, Thence along the North line of said Section 19, N89°31'53"E a distance of 2.76 feet; Thence S0°06'06"E a distance of 103.90 feet; Thence N33°18'13"W a distance of 31.60 feet; Thence N16°32'13"W a distance of 54.74 feet; Thence to a point on the North line of said Section 19, N0°13'48"E a distance of 24.88 feet; Thence N89°46'21"E a distance of 29.88 feet to the point of beginning.

EASEMENT No. 3.

The following description is of the centerline of the City Aquaduct easement from the deed in Book 172, Page 251. The easement is 30 feet wide lying 15 feet on either side of the centerline.

Commencing at the NE 1/16th corner of Section 19, T9S, R40E, W.M., Baker County, Oregon, Thence S89°32'16"W a distance of 529.95 feet; Thence S0°06'30"E a distance of 656.60 feet; Thence S89°34'46"W a distance of 69.23' feet to the True Point of Beginning for this description;
Thence N0°31'00"W a distance of 21.90 feet; Thence N36°21'55"W a distance of 273.86 feet; Thence N37°58'41"W a distance of 219.23 feet; Thence N58°44'55"W a distance of 670.94 feet; Thence N59°21'32"W a distance of 380.55 feet; Thence N59°48'24"W a distance of 300.68 feet; Thence N51°44'58"W a distance of 732.65 feet to a point which lies S1°35'16"W 400.06 feet from the W 1/16th corner between Sections 18 and 19, T9S, R40E, W.M., Baker County, Oregon.

EASEMENT No. 4.

The following description is of the centerline of the easement for the Private drive from deed 81-28-121 as it exists on the ground. The easement is 30 feet wide lying 15 feet on either side of the centerline.

Commencing at the NE 1/16th corner of Section 19, T9S, R40E, W.M., Baker County, Oregon, Thence S89°32'16"W a distance of 529.95 feet; Thence S0°06'30"E a distance of 656.60 feet; Thence S89°34'46"W a distance of 150.58 feet; Thence S89°33'28" W a distance of 288.69 feet to the Point of Beginning for this description:
Thence N11°46'51"W a distance of 60.15 feet; Thence N14°27'51"W a distance of 63.02 feet; Thence 124.56 feet along a curve to the right having a radius of 119.17 feet and a central angle of 59°53'13", the long chord of which bears N15°28'46"E a distance of 118.97 feet; Thence N45°25'22"E a distance of 56.83 feet; Thence 87.10 feet along a curve to the left having a radius of 143.39 feet and a central angle of 34°48'05", the long chord of which bears N28°01'20"E a distance of 85.77 feet; Thence N10°37'18"E a distance of 53.46 feet; Thence N11°16'24"E a distance of 47.83 feet to a point on the south line of Greenridge Drive.

LOT AREA COMPUTATIONS

The tentative plan of ALPINE ESTATES as approved by the County Planning Commission was prepared by Alpine Land, Inc. The lot areas shown on the tentative plan were computed by dividing the original tract area as seen on the assessors map by the number of proposed lots and did not account for the roadway. In order to meet the minimum lot area required by the zoning ordinance the portion of each lot lying within the roadway has to be included in the computation. The lot areas shown on the face of this final plat are the "net taxable" area of each lot. The area of each lot lying within the roadway is as shown in the table below. Total lot area is obtained by adding "net taxable" area to roadway area. The dividing line between lots is the centerline of the roadways except as explained in survey notes 3, 4, and 6. The turnaround area at the intersection of Greenridge Drive and Alpine lane is a part of Lot 2.

LOT No. 1	1.33 ACRES IN ROADWAY
LOT No. 2	1.08 ACRES IN ROADWAY
LOT No. 3	0.61 ACRES IN ROADWAY
LOT No. 4	1.07 ACRES IN ROADWAY
LOT No. 5	0.17 ACRES IN ROADWAY
LOT No. 6	0.59 ACRES IN ROADWAY
LOT No. 11	0.99 ACRES IN ROADWAY

SURVEY NOTES:

NOTE No. 1

This pin was set by survey No. 9-40-24 as a reference pin for the property corner. The pin lies 5.00 feet north of the intersection of the property line and the road R/W. No pin was set at the R/W point due to construction.

NOTE No. 2

No pin was set at the end of the centerline due to a conflict with the underground fibre optic line.

NOTE No. 3

The dashed lines within the roadway show the lot lines as they would exist if the road were vacated. The lines were established in this manner due to lot size requirements from the Baker County Zoning Ordinance. All lots from phase one are effected by this situation. The southeast corner of Lot 5 would be the intersection of the north right of way line marked L9 with the extension of the west line of Lot 6. The northwesterly corner of Lot 6 would be the intersection of the extension of the west line of Lot 6 with the westerly R/W line of curve 13. Only that portion of Alpine lane lying westerly of these two points would be a part of Lot 5 after the road vacation. The dividing line between lots 4 and 5 is the north line of Alpine Lane. The heavy line in the detail below shows the lines after vacation for lots 1, 2, 3, and 11. The line between lots 2 and 3 and lots 1 and 11 that are not shown in the detail are the centerline of Greenridge Drive.

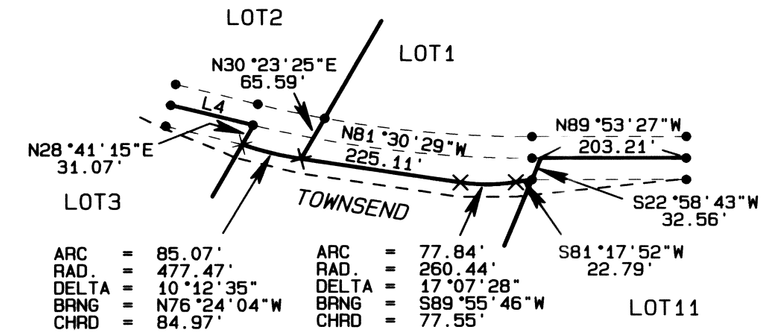

NOTE No. 4

The division line between Lot 4 and Lot 2 after a road vacation would be the extension of line L15 to the south line of the Rockwell tract as indicated by the dashed line in the roadway.

NOTE No. 5

The portion of Grace Street not vacated by Ordinance No. 92-198 is as shown in the diagram below. The road dedication on this plat adds an additional 30 feet of public right of way on the south side of the 1/16th line for a total of 60 feet in R/W width.

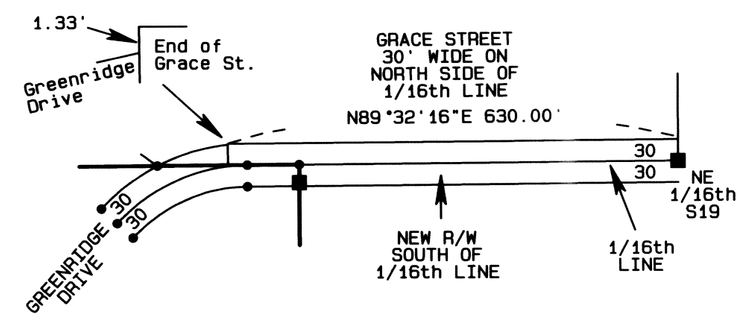

NOTE No. 6

The southerly R/W line of Greenridge Drive is contiguous with the northerly line of the Townsend tract. The R/W width varies along this north line but is greater than 60' at all points. Deed distances and angles and the found existing monuments were used to establish the Townsends north line. The dashed line shown across the north end of the Townsend tract and a part of lots 3 and 11 is the existing road easement from deed 77-19-081. This easement is 20' wide lying southerly and parallel with the north line and may be established using the monuments set on this plat.

Document No. B 99-51-142
Recorded TIME: 2:20 PM
DATE: 12/21/99
Julie Wall Clerk
Baker County, Or., Clerk

REGISTERED PROFESSIONAL LAND SURVEYOR
David L. Haddock
OREGON
JULY 12, 1968
DAVID L. HADDOCK
852
RENEWS 6-30-01

PROJECT No. 98-55

SURVEY FOR

MR JAMES BRIGGS
61995 QUAIL ROAD
ISLAND CITY, OR. 97850

David L. Haddock, Surveyor and Engineer
P.O. Box 1574
Pendleton, Oregon 97801
(541) 276-2174

HADDOCK SURVEYING

GPS AND TOTAL STATION